Katrin Inclusive Hand Towel Dispenser Mini

92087

- The cover opens downwards for easy refilling.
- The lock can be used with or without a key.
- Katrin Hand Towel Mini Dispensers are designed for small spaces.
- Suitable Katrin products are One Stop and Non Stop folded Hand Towels which have a maximum wid 210 mm.

ISO 9001 ISO 14001

Product

x 248 mm	Black	0,982 kg
y 350 mm		
z 114 mm		

Transport package

x 256 mm	1	1,176 kg
y 360 mm		6414300092087
z 123 mm		

Pallet information

x 800 mm	81	120,406 kg
y 1230 mm		6414300092094
z 1200 mm		

Dimensions

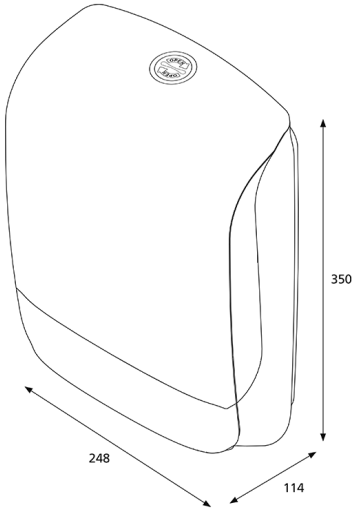

Positioning guide

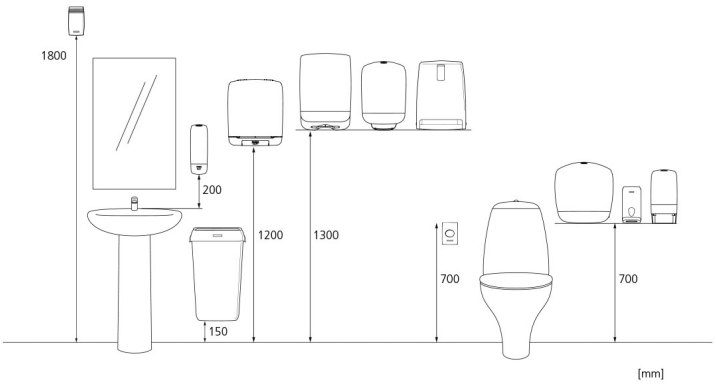

Copyright © Metsä Tissue Corporation